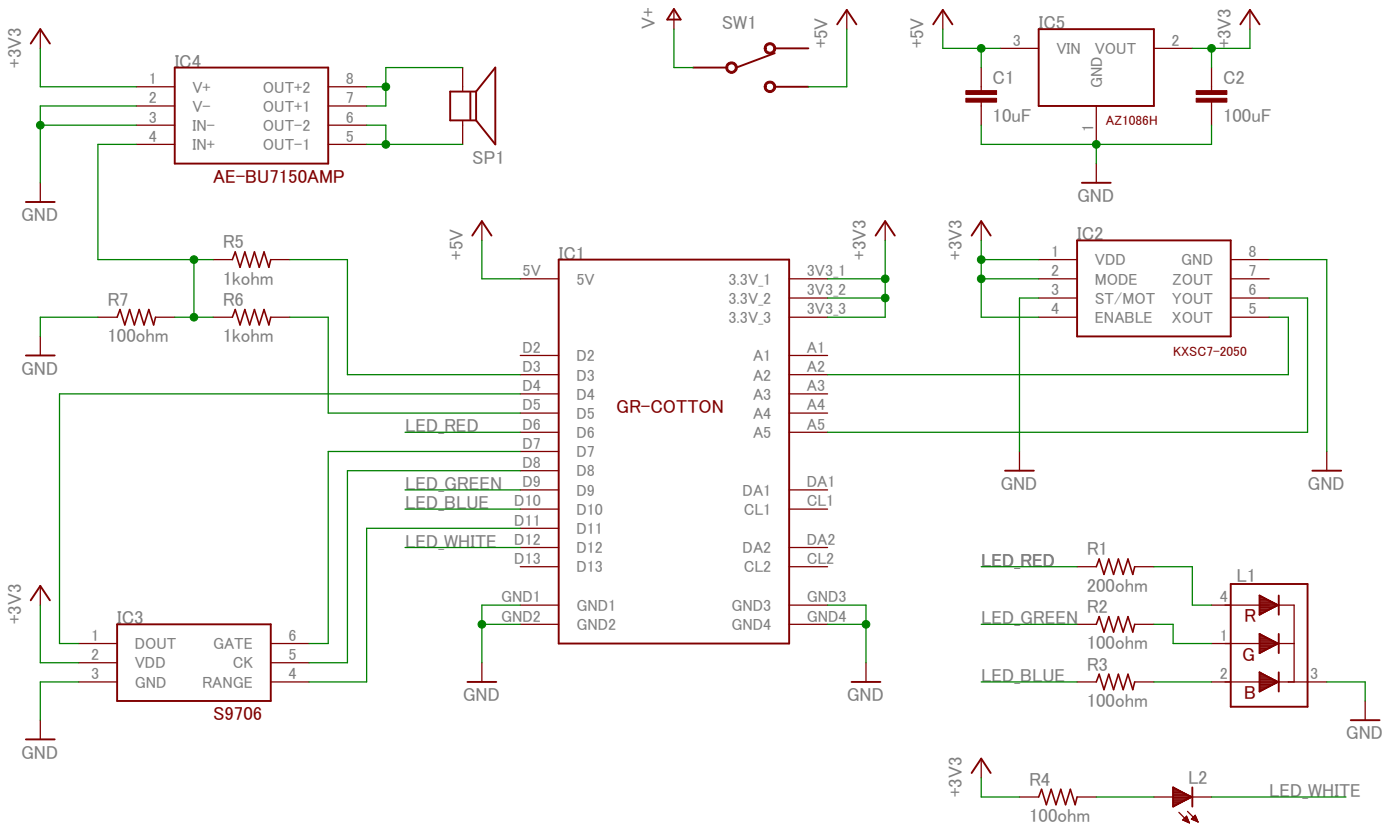

2017/10/14 18:11 D:¥Workspace¥Eagle_Projects¥GadgetRenesas¥ColorRing¥colorRing.sch (Sheet: 1/1)